U.S. Department
of Transportation

**Pipeline and Hazardous
Materials Safety
Administration**

1200 New Jersey Avenue SE
Washington, DC 20590

APR 2 2 2015

David Arange
Ammunition Surveillance Inspector
Military Ocean Terminal Concord
Bldg. 542
410 Norman Ave
Concord, CA 94520

Ref. No.: 14-0143

Dear Mr. Arange:

This responds to your July 10, 2014 letter requesting clarification of the Hazardous Materials Regulations (HMR; 49 CFR Parts 171-180) applicable to the vessel stowage requirements for rockets with bursting charges. In your letter, you state that you offer for transportation "UN0181, Rockets, with bursting charge, 1.1E, II" by vessel. You note that "UN0181, Rockets, with bursting charge" are assigned the vessel stowage category "04" in the October 1, 2013 edition of the HMR. Further, you provide pictures and drawings entitled "Minimum Procedures Applicable to the Handling, Stowage, and Bracing Aboard Ships and Barges of the Rocket POD/Container (RP/C) for the Multiple Launch Rocket System (MLRS)." You ask whether these rockets must be stowed in a closed storage container for below deck stowage, or is the RP/C suitable as a storage container for below deck stowage?

The definition of a "closed cargo transport unit for Class 1 (explosive) materials" means "a freight container or transport vehicle that fully encloses the contents by permanent structures and can be secured to the ship's structure and are, except for the carriage of division 1.4 explosives, structurally serviceable (see § 176.172)." Based on the pictures and drawings of the RP/C you provided in your letter, the RP/C in question fully encloses the contents, is able to be secured to the ships structure due to its design, and is structurally serviceable. The RP/C may be considered a closed cargo transport unit for Class 1 (explosive) materials.

I trust this satisfies your inquiry. Please contact us if we can be of further assistance.

Sincerely,

Duane A. Pfund

Duane A. Pfund
International Standards Coordinator
Standards and Rulemaking Division

Nickels
176.63, 173.62, 172.101
IMDG
14-0143

Dodd, Alice (PHMSA)

From: INFOCNTR (PHMSA)
Sent: Monday, July 14, 2014 4:06 PM
To: Hazmat Interps
Subject: FW: Request for formal letter of interpretation
Attachments: IMDG Code Rockets UN0181.pdf; 49 CFR Rockets UN 0181.pdf; MLRS POD UN0181.docx; Rocket POD shiploading drawing.pdf

Hi Alice and Shante,

We received this request for a letter of interpretation. Thanks.

-Adam

From: Arange, David W CIV USARMY SDDC (US) [mailto:david.w.arange.civ@mail.mil]
Sent: Thursday, July 10, 2014 6:31 PM
To: INFOCNTR (PHMSA)
Subject: Request for formal letter of interpretation

To Whom it may concern,

I am requesting a formal letter of interpretation to give a clear understanding of a closed cargo transport unit in regards to shipping rockets?

I am shipping rockets UN 0181 onboard a cargo vessel. The 2012 edition of the IMDG code as well as the 2013 edition of the 49 CFR list the rockets as stowage category 4 – "On deck in closed cargo transport unit or under deck in a closed cargo unit." References are attached.

In the previous editions of the 49 CFR and IMDG Code the rockets were listed as Stowage Category 3. "on deck in a closed shipping container or under deck."

Are rocket in rocket PODS stowed below decks now required to be in a closed storage container (ISO / TEU type container) or is the rocket POD a suitable storage container for below deck stowage?

The IMDG defines a closed cargo transport unit as "a unit that fully encloses the contents by permanent structures, can be secured to the ship's structure and is, except for 1.4, structurally serviceable and defined in this section. Cargo transport units with fabric sides or tops are not closed cargo transport units. The floor of any closed cargo transport unit shall either be constructed of wood, close-boarded, or so arranged that gods are stowed on sparred grating, wooden pallets, or dunnage." References are attached.

Attached is a picture of 3 rocket pods. The actual rockets are stored in the circular tubes seen in the picture.

I am also attaching an engineering drawing used by the U.S. Army to load the rocket pods on a vessel. The drawing was used prior to the 2012 edition of the IMDG Code and the 2013 edition of the 49 CFR being issued.

Thank you for your assistance.

v/r

David Arange
Ammunition Surveillance Inspector
Military Ocean Terminal Concord
Bldg 542
410 Norman Ave
Concord, Ca. 94520
Office: 925-246-4272
Cell: 315-767-3183

UN No.	Proper Shipping Name (PSN)	Class or division	Subsidiary risk(s)	Packing group	Special provisions	Limited and excepted quantity provisions		Packing		IBC		Portable tanks and bulk containers			EmS	Stowage and segregation	Properties and observations	UN No.
						Limited quantities	Excepted quantities	Instructions	Provisions	Instructions	Provisions		Tank instructions	Provisions				
(1)	(2) 3.1.2	(3) 2.0	(4) 2.0	(5) 2.0.1.3	(6) 3.3	(7a) 3.4	(7b) 3.5	(8) 4.1.4	(9) 4.1.4	(10) 4.1.4	(11) 4.1.4	(12)	(13) 4.2.5 4.3	(14) 4.2.5	(15) 5.4.3.2 7.3	(16) 7.1 7.2	(17)	(18)
△ 0181	ROCKETS with bursting charge	1.1E	–	–	–	0	E0	P130 LP101	PP67 L1	–	–	–	–	–	F-B, S-X	Category 04. Protected from sources of heat.	See glossary of terms in appendix B.	0181 △
△ 0182	ROCKETS with bursting charge	1.2E	–	–	–	0	E0	P130 LP101	PP67 L1	–	–	–	–	–	F-B, S-X	Category 04. Protected from sources of heat.	See glossary of terms in appendix B.	0182 △
△ 0183	ROCKETS with inert head	1.3C	–	–	–	0	E0	P130 LP101	PP67 L1	–	–	–	–	–	F-B, S-X	Category 04. Protected from sources of heat.	See glossary of terms in appendix B.	0183 △
△ 0186	ROCKET MOTORS	1.3C	–	–	–	0	E0	P130 LP101	PP67 L1	–	–	–	–	–	F-B, S-X	Category 04. Protected from sources of heat.	See glossary of terms in appendix B	0186 △
△ 0190	SAMPLES, EXPLOSIVE other than initiating explosive	1	–	–	16 274	0	E0	P101	–	–	–	–	–	–	F-B, S-X	Category 05. Protected from sources of heat.	See glossary of terms in appendix B.	0190 △
△ 0191	SIGNAL DEVICES, HAND	1.4G	–	–	–	0	E0	P135	–	–	–	–	–	–	F-B, S-X	Category 02. Protected from sources of heat.	See glossary of terms in appendix B.	0191 △
△ 0192	SIGNALS, RAILWAY TRACK, EXPLOSIVE	1.1G	–	–	–	0	E0	P135	–	–	–	–	–	–	F-B, S-X	Category 03. Protected from sources of heat.	See glossary of terms in appendix B.	0192 △
△ 0193	SIGNALS, RAILWAY TRACK, EXPLOSIVE	1.4S	–	–	–	0	E0	P135	–	–	–	–	–	–	F-B, S-X	Category 01. Protected from sources of heat.	See glossary of terms in appendix B.	0193 △
△ 0194	SIGNALS, DISTRESS, ship	1.1G	–	–	–	0	E0	P135	–	–	–	–	–	–	F-B, S-X	Category 03. Protected from sources of heat.	See glossary of terms in appendix B.	0194 △
△ 0195	SIGNALS, DISTRESS, ship	1.3G	–	–	–	0	E0	P135	–	–	–	–	–	–	F-B, S-X	Category 03. Protected from sources of heat.	See glossary of terms in appendix B.	0195 △
△ 0196	SIGNALS, SMOKE	1.1G	–	–	–	0	E0	P135	–	–	–	–	–	–	F-B, S-X	Category 03. Protected from sources of heat.	See glossary of terms in appendix B.	0196 △
△ 0197	SIGNALS, SMOKE	1.4G	–	–	–	0	E0	P135	–	–	–	–	–	–	F-B, S-X	Category 02. Protected from sources of heat.	See glossary of terms in appendix B.	0197 △
△ 0204	SOUNDING DEVICES, EXPLOSIVE	1.2F	–	–	–	0	E0	P134 LP102	–	–	–	–	–	–	F-B, S-X	Category 05. Protected from sources of heat.	See glossary of terms in appendix B.	0204 △
△ 0207	TETRANITROANILINE	1.1D	–	–	–	0	E0	P112 (b) or (c)	–	–	–	–	–	–	F-B, S-Y	Category 04. Protected from sources of heat	Substance.	0207 △
△ 0208	TRINITROPHENYLMETHYL-NITRAMINE (TETRYL)	1.1D	–	–	–	0	E0	P112 (b) or (c)	–	–	–	–	–	–	F-B, S-Y	Category 04. Protected from sources of heat.	Substance. Mass detonating explosive.	0208 △
△ 0209	TRINITROTOLUENE (TNT) dry or wetted with less than 30% water, by mass	1.1D	–	–	–	0	E0	P112 (a), (b) or (c)	PP46	–	–	–	–	–	F-B, S-Y	Category 04. Protected from sources of heat.	Substance. Tritonal is a substance consisting of trinitrotoluene (TNT) mixed with aluminium.	0209 △
△ 0212	TRACERS FOR AMMUNITION	1.3G	–	–	–	0	E0	P135	PP69	–	–	–	–	–	F-B, S-X	Category 03. Protected from sources of heat.	See glossary of terms in appendix B.	0212 △
△ 0213	TRINITROANISOLE	1.1D	–	–	–	0	E0	P112 (b) or (c)	–	–	–	–	–	–	F-B, S-Y	Category 04. Protected from sources of heat.	Substance.	0213 △
△ 0214	TRINITROBENZENE dry or wetted with less than 30% water, by mass	1.1D	–	–	–	0	E0	P112 (a), (b) or (c)	–	–	–	–	–	–	F-B, S-Y	Category 04. Protected from sources of heat.	Substance.	0214 △
△ 0215	TRINITROBENZOIC ACID dry or wetted with less than 30% water, by mass	1.1D	–	–	–	0	E0	P112 (a), (b) or (c)	–	–	–	–	–	–	F-B, S-Y	Category 04. Protected from sources of heat.	Substance	0216 △
△ 0216	TRINITRO-*m*-CRESOL	1.1D	–	–	–	0	E0	P112 (b) or (c)	PP26	–	–	–	–	–	F-B, S-Y	Category 04. "Away from" lead and its compounds. Protected from sources of heat.	Substance.	0216 △
△ 0217	TRINITRONAPHTHALENE	1.1D	–	–	–	0	E0	P112 (b) or (c)	–	–	–	–	–	–	F-B, S-Y	Category 04. Protected from sources of heat.	Substance.	0217 △
△ 0218	TRINITROPHENETOLE	1.1D	–	–	–	0	E0	P112 (b) or (c)	–	–	–	–	–	–	F-B, S-Y	Category 04. Protected from sources of heat.	Substance.	0218 △

than one splice (e.g., a lapped splice) in top or bottom end rails or door headers; more than two splices in any one top or bottom side rail or any splice in a door sill or corner post; door hinges and hardware that are seized, twisted, broken, missing or otherwise inoperative; gaskets and seals that do not seal; or, for freight containers, any distortion of the overall configuration great enough to prevent proper alignment of handling equipment, mounting and securing on chassis or vehicle, or insertion into ship's cells. In addition, deterioration in any component of the cargo transport unit, regardless of the material of construction, such as rusted-out metal in sidewalls or disintegrated fiberglass, is unacceptable. Normal wear, however, including oxidation (rust), slight dents and scratches and other damage that does not affect serviceability or the weathertight integrity of the units, is acceptable.

7.1.3 Stowage categories

7.1.3.1 Stowage categories for class 1

Dangerous goods of class 1 other than division 1.4, compatibility group S, packed in limited quantities shall be stowed as indicated in column 16 of the Dangerous Goods List in accordance with one of the categories specified below.

Stowage category 01	Cargo ships (up to 12 passengers)	On deck in closed cargo transport unit or under deck
	Passenger ships	On deck in closed cargo transport unit or under deck
Stowage category 02	Cargo ships (up to 12 passengers)	On deck in closed cargo transport unit or under deck
	Passenger ships	On deck in closed cargo transport unit or under deck in closed cargo transport unit in accordance with 7.1.4.4.5
Stowage category 03	Cargo ships (up to 12 passengers)	On deck in closed cargo transport unit or under deck
	Passenger ships	Prohibited except if in accordance with 7.1.4.4.5
Stowage category 04	Cargo ships (up to 12 passengers)	On deck in closed cargo transport unit or under deck in closed cargo transport unit
	Passenger ships	Prohibited except if in accordance with 7.1.4.4.5
Stowage category 05	Cargo ships (up to 12 passengers)	On deck only in closed cargo transport unit
	Passenger ships	Prohibited except if in accordance with 7.1.4.4.5

7.1.3.2 Stowage categories for classes 2 to 9

Dangerous goods of classes 2 to 9 and division 1.4, compatibility group S, packed in limited quantities shall be stowed as indicated in column 16 of the Dangerous Goods List in accordance with one of the categories specified below:

Stowage category A

Cargo ships or passenger ships carrying a number of passengers limited to not more than 25 or to 1 passenger per 3 m of overall length, whichever is the greater number	ON DECK OR UNDER DECK
Other passenger ships in which the limiting number of passengers transported is exceeded	ON DECK OR UNDER DECK

Stowage category B

Cargo ships or passenger ships carrying a number of passengers limited to not more than 25 or to 1 passenger per 3 m of overall length, whichever is the greater number	ON DECK OR UNDER DECK
Other passenger ships in which the limiting number of passengers transported is exceeded	ON DECK ONLY

Chapter 7.1

General stowage provisions

7.1.1 Introduction

This chapter contains the general provisions for the stowage of dangerous goods in all types of ships. Specific provisions applicable to, container ships, ro–ro ships, general cargo ships and barge carrying ships, are stipulated in chapters 7.4 to 7.7.

7.1.2 Definitions

Note: The term "magazine" is no longer used in the context of the IMDG Code. A magazine that is not a fixed part of the ship shall meet the provisions for a closed cargo transport unit for class 1 (see 7.1.2). A magazine that is a fixed part of the ship such as compartment, below deck area or hold shall meet the provisions of 7.6.2.4.

Clear of living quarters means that packages or cargo transport units shall be stowed a minimum distance of 3 m from accommodation, air intakes, machinery spaces and other enclosed work areas.

Closed cargo transport unit for class 1 means a unit which fully encloses the contents by permanent structures, can be secured to the ship's structure and is, except for division 1.4, structurally serviceable as defined in this section. Cargo transport units with fabric sides or tops are not closed cargo transport units. The floor of any closed cargo transport unit shall either be constructed of wood, close-boarded, or so arranged that goods are stowed on sparred gratings, wooden pallets or dunnage.

Combustible material means material which may or may not be dangerous goods but which is easily ignited and supports combustion. Examples of combustible materials include wood, paper, straw, vegetable fibres, products made from such materials, coal, lubricants, and oils. This definition does not apply to packaging material or dunnage.

Potential sources of ignition means, but is not limited to, open fires, machinery exhausts, galley uptakes, electrical outlets and electrical equipment including those on refrigerated or heated cargo transport units unless they are of certified safe type.*

Protected from sources of heat means that packages and cargo transport units shall be stowed at least 2.4 m from heated ship structures, where the surface temperature is liable to exceed 55°C. Examples of heated structures are steam pipes, heating coils, top or side walls of heated fuel and cargo tanks, and bulkheads of machinery spaces. In addition, packages not loaded inside a cargo transport unit and stowed on deck shall be shaded from direct sunlight. The surface of a cargo transport unit can heat rapidly when in direct sunlight in nearly windless conditions and the cargo may also become heated. Depending on the nature of the goods in the cargo transport unit and the planned voyage precautions shall be taken to ensure that exposure to direct sunlight is reduced.

Stowage means the proper placement of dangerous goods on board a ship in order to ensure safety and environmental protection during transport.

Stowage on deck means stowage on the weather deck. For open ro–ro cargo spaces see 7.5.2.6.

Stowage under deck means any stowage that is not on the weather deck. For hatchless containerships see 7.4.2.1.

Structurally serviceable for class 1 means the cargo transport unit shall not have major defects in its structural components, e.g., top and bottom rails, top and bottom end rails, door sill and header, floor cross-members, corner posts, and corner fittings in a freight container. Major defects are: dents or bends in the structural members greater than 19 mm in depth, regardless of length; cracks or breaks in structural members; more

* For cargo spaces, refer to SOLAS II-2/19.3.2 and for refrigerated or heated cargo transport units refer to Recommendations published by the International Electrotechnical Commission, in particular IEC 60079.

Symbols (1)	Hazardous materials descriptions and proper shipping names (2)	Hazard class or division (3)	Identification Numbers (4)	PG (5)	Label Codes (6)	Special provisions (7)	(8) Packaging (§173.***) Exceptions (8A)	Non-bulk (8B)	Bulk (8C)	(9) Quantity limitations Passenger aircraft/rail (9A)	Cargo aircraft only (9B)	(10) Vessel stowage Location (10A)	Other (10B)
	Rockets, liquid fueled *with bursting charge*	1.1J	UN0397	II	1.1J		None	62	None	Forbidden	Forbidden	05	25, 23E
	Rockets, liquid fueled *with bursting charge*	1.2J	UN0398	II	1.2J		None	62	None	Forbidden	Forbidden	05	25, 23E
	Rockets, *with bursting charge*	1.1F	UN0180	II	1.1F		None	62	None	Forbidden	Forbidden	05	25
	Rockets, *with bursting charge*	1.1E	UN0181	II	1.1E		None	62	62	Forbidden	Forbidden	04	25
	Rockets, *with bursting charge*	1.2E	UN0182	II	1.2E		None	62	62	Forbidden	Forbidden	04	25
	Rockets, *with bursting charge*	1.2F	UN0295	II	1.2F		None	62	None	Forbidden	Forbidden	05	25
	Rockets, *with expelling charge*	1.2C	UN0436	II	1.2C		None	62	62	Forbidden	Forbidden	04	25
	Rockets, *with expelling charge*	1.3C	UN0437	II	1.3C		None	62	62	Forbidden	Forbidden	04	25
	Rockets, *with expelling charge*	1.4C	UN0438	II	1.4C		None	62	62	Forbidden	75 kg	02	25
	Rockets, *with inert head*	1.3C	UN0183	II	1.3C		None	62	62	Forbidden	Forbidden	04	25
	Rockets, *with inert head*	1.2C	UN0502		1.2C		None	62	62	Forbidden	Forbidden	02	25, 5E
	Rosin oil	3	UN1286	II	3	IB2, T4, TP1	150	202	242	5 L	60 L	B	
	Rosin oil	3	UN1286	III	3	B1, IB3, T2, TP1	150	203	242	60 L	220 L	A	
	Rubber solution	3	UN1287	II	3	149, IB2, T4, TP1, TP8	150	202	242	5 L	60 L	B	
	Rubber solution	3	UN1287	III	3	B1, IB3, T2, TP1	150	203	242	60 L	220 L	A	
	Rubber scrap *or* shoddy, *powdered or granulated, not exceeding 840 microns and rubber contend exceeding 45%*	4.1	UN1345	II	4.1	IB8, IP2, IP4, T3, TP33	151	212	240	15 kg	50 kg	A	
	Rubidium	4.3	UN1423	I	4.3	22, A7, A19, IB4, IP1, N34, N40, N45	None	211	242	Forbidden	15 kg	D	52
	Rubidium hydroxide	8	UN2678	II	8	IB8, IP2, IP4, T3, TP33	154	212	240	15 kg	50 kg	A	29, 52
	Rubidium hydroxide solution	8	UN2677	II	8	B2, IB2, T7, TP2	154	202	242	1 L	30 L	A	29, 52
	Rubidium hydroxide solution	8	UN2677	III	8	IB3, T4, TP1	154	203	241	5 L	60 L	A	29, 52
	Safety fuse, see Fuse, safety												
G	Samples, explosive, *other than initiating explosives*		UN0190	II		113	None	62	None	Forbidden	Forbidden	05	25
	Sand acid, see Fluorosilicic acid												
	Seed cake, containing vegetable oil solvent extractions and expelled seeds, *with not more than 10 percent of oil and when the amount of moisture is higher than 11 percent, with not more than 20 percent of oil and moisture combined*	4.2	UN1386	III	None	IB8, IP3, IP7, N7	None	213	241	Forbidden	Forbidden	E	13, 25
I	Seed cake *with more than 1.5 percent oil and not more than 11 percent moisture*	4.2	UN1386	III	None	IB8, IP3, IP7, N7	None	213	241	Forbidden	Forbidden	A	13, 25
I	Seed cake *with not more than 1.5 percent oil and not more than 11 percent moisture*	4.2	UN2217	III	None	IB8, IP3, IP7, N7	None	213	241	Forbidden	Forbidden	E	
G	Selenates *or* Selenites	6.1	UN2630	I	6.1	IB7, IP1, T6, TP33	None	211	242	5 kg	50 kg	A	
	Selenic acid	8	UN1905	I	8	IB7, IP1, N34, T6, TP33	None	211	242	Forbidden	25 kg	B	
G	Selenium compound, liquid, n.o.s.	6.1	UN3440	I	6.1	T14, TP2, TP27	None	201	243	1 L	30 L	B	
G	Selenium compound, liquid, n.o.s.	6.1	UN3440	II	6.1	IB2, T11, TP2, TP27	153	202	243	5 L	60 L	A	
G	Selenium compound, liquid, n.o.s.	6.1	UN3440	III	6.1	IB3, T7, TP1, TP28	153	203	241	60 L	220 L	B	
G	Selenium compound, solid, n.o.s.	6.1	UN3283	I	6.1	IB7, IP1, T6, TP33	None	211	242	5 kg	50 kg	B	
G	Selenium compound, solid, n.o.s.	6.1	UN3283	II	6.1	IB8, IP2, IP4, T3, TP33	153	212	242	25 kg	100 kg	A	
G	Selenium compound, solid, n.o.s.	6.1	UN3283	III	6.1	IB8, IP3, T1, TP33	153	213	240	100 kg	200 kg	A	
	Selenium disulfide	6.1	UN2657	II	6.1	IB8, IP2, IP4, T3, TP33	153	212	242	25 kg	100 kg	D	40

umn 10B [Other provi-
ar stowage requirements
aterials. Hazardous ma-
nsportation as limited
stowage category A and
owage codes assigned by
ing of each code in Col-
§ 176.84 of this subchap-
is subchapter sets forth
ts for each of the autho-
Column 10A. (For bulk
, see 46 CFR parts 30 to
3 and 154.) The autho-
specified in Column 10A

'A" means the material
" or "under deck" on a
enger vessel.
B" means—
be stowed "on deck" or
vessel and on a passen-
nber of passengers lim-
n the larger of 25
enger per each 3 m of
l
passenger vessels in
assengers specified in
section is exceeded.
C" means the material
only" on a cargo vessel

D" means the material
only" on a cargo vessel
carrying a number of
more than the larger of
enger per each 3 m of
the material is prohib-
in which the limiting
xceeded.
E" means the material
or "under deck" on a
nger vessel carrying a
ited to not more than
, or one passenger per
ength, but is prohibit-
enger vessel in which
sengers is exceeded.
F" means the material
n closed cargo trans-
on a cargo vessel (up
assenger vessel.
G" means the material
n closed cargo trans-
on a cargo vessel (up
leck" in closed cargo

transport units or "under deck" in closed cargo transport units on a passenger vessel.

(8) Stowage category "03" means the material may be stowed "on deck" in closed cargo transport units or "under deck" on a cargo vessel (up to 12 passengers) but the material is prohibited on a passenger vessel.

(9) Stowage category "04" means the material may be stowed "on deck" in closed cargo transport units or "under deck" in closed cargo transports on a cargo vessel (up to 12 passengers) but the material is prohibited on a passenger vessel.

(10) Stowage category "05" means the material may be stowed "on deck" in closed cargo transport units on a cargo vessel (up to 12 passengers) but the material is prohibited on a passenger vessel.

(l) *Changes to the Table.* (1) Unless specifically stated otherwise in a rule document published in the FEDERAL REGISTER amending the Table—

(i) Such a change does not apply to the shipment of any package filled prior to the effective date of the amendment; and

(ii) Stocks of preprinted shipping papers and package markings may be continued in use, in the manner previously authorized, until depleted or for a one-year period, subsequent to the effective date of the amendment, whichever is less.

(2) Except as otherwise provided in this section, any alteration of a shipping description or associated entry which is listed in the § 172.101 Table must receive prior written approval from the Associate Administrator.

(3) Cylinders used for chlorine (UN1017) with preprinted markings conforming to § 172.400a(a)(1)(ii) without the Division 5.1 subsidiary hazard number may continue to be used until January 1, 2011.

[62 FR 24689, May 6, 1997; 62 FR 39404, July 22, 1997; 63 FR 52847, Oct. 1, 1998; 64 FR 10753, March 5, 1999; 65 FR 50457, Aug. 18, 2000; 65 FR 58620, Sept. 29, 2000; 65 FR 60382, Oct. 11, 2000; 66 FR 33337, June 21, 2001; 66 FR 45378, 45379, Aug. 28, 2001; 67 FR 15739, April 3, 2002; 67 FR 51641, Aug. 8, 2002; 67 FR 53133, Aug. 14, 2002; 67 FR 57635, Sept. 11, 2002; 67 FR 61013, Sept. 27, 2002; 69 FR 75215, Dec. 15, 2004; 69 FR 76063, Dec. 20, 2004; 70 FR 34072, June 13, 2005; 70 FR 34388, June 14, 2005; 70 FR 56091, Sept. 23, 2005; 71 FR 3425, Jan. 23, 2006; 71 FR 78612, Dec. 29, 2006; 75 FR 69, Jan. 4, 2010; 77 FR 60939, Oct. 5, 2012; 78 FR 1033, Jan. 7, 2013; 78 FR 60751, Oct. 2, 2013]

172.101 HAZARDOUS MATERIALS TABLE—

DO NOT DROP
FORKLIFT AREA
DO NOT PUSH
DO NOT TOW
DO NOT DROP
DO NOT DROP
DO NOT DROP

REVISION NO. 3
REVIEWED BY
MTMC

SIGNED Robert E. Kar
MTMC-TEA

DATE 22 Sep 1992

MLRS

MINIMUM REQUIREMENTS FOR THE HANDLING, STOWAGE, AND BRACING ABOARD SHIPS⊕ OF ROCKET POD/CONTAINERS (RP/C) FOR THE MULTIPLE LAUNCH ROCKET SYSTEM

⊕THIS DRAWING ALSO INCLUDES PROCEDURES FOR BARGE LOADING.

U.S. ARMY MATERIEL COMMAND DRAWING

APPROVED, U.S. ARMY MISSILE COMMAND
RK
Carl Honea

APPROVED BY ORDER OF COMMANDING GENERAL, U.S. ARMY MATERIEL COMMAND
William F. Ernst
U.S. ARMY DEFENSE AMMUNITION CENTER AND SCHOOL

DRAFTSMAN	TECHNICIAN	ENGINEER
D. WHITMORE	R. HAYNES	W. FRERICHS
R. HAYNES	R. HAYNES	

VALIDATION ENGINEERING DIVISION	TRANSPORTATION ENGINEERING DIVISION	LOGISTICS ENGINEERING OFFICE
JK	W. French	W. French

MAY 1982

REVISION NO. 3	MARCH 1993
SEE THE REVISION LISTING ON PAGE 2	

CLASS	DIVISION	DRAWING	FILE
19	48	5778	GM18RS1

DO NOT SCALE

PROJECT GM 724-79

NOTES

GENERAL:

A. THIS DOCUMENT HAS BEEN PREPARED AND ISSUED IN ACCORDANCE WITH AR 740-1

B. THIS DRAWING DEPICTS MINIMUM PROCEDURES APPLICABLE TO THE HANDLING, STOWAGE, AND BRACING ABOARD SHIPS AND BARGES OF THE ROCKET POD/CONTAINER (RP/C) FOR THE MULTIPLE LAUNCH ROCKET SYSTEM (MLRS)

C. OTHER TYPES OF CARGO MAY BE STOWED IN THE SAME HOLD OR TWEEN DECK PROVIDING THE ITEMS STOWED ARE COMPATIBLE WITH THE ROCKET POD/CONTAINERS SHOWN HEREIN. PERTINET REQUIREMENT OF TITLE 49 CODE OF FEDERAL REGULATION, PART 176, MUST BE APPLIED.

D. FOR DETAILS OF THE ROCKET POD/CONTAINER, SEE US ARMY MISSILE COMMAND DRAWING NO. 13027900.

CONTAINER DIMENSIONS - - 13'-10" LONG BY 41-1/2" WIDE BY 33" HIGH.
GROSS WEIGHT - - - - - - 5,078 POUNDS (APPROX).
CUBE - - - - - - - - - - 131.56 CU. FT.

HANDLING:

A. PERTINENT PROVISIONS OF TITLE 49 CODE OF FEDERAL REGULATIONS APPLY.

B. EACH ROCKET POD/CONTAINER WILL BE HANDLED INDIVIDUALLY AND SHOULD BE ACCOMPLISHED BY USING THE LIFT POINTS DESIGNATED HEREIN.

C. THE HANDLING SLING SHOULD BE EQUIPPED WITH SAFETY TYPE HOOKS AND SHALL BE OF A DESIGN AND CONFIGURATION TO LIFT THE ITEM IN SUCH A MANNER THAT THE ROCKET POD/CONTAINER IS NOT DAMAGED.

D. ALTHOUGH DESIRABLE, A LEVEL LIFT IS NOT MANDATORY. THE CENTER OF BALANCE OF THIS ITEM IS SHOWN TO ASSIST IN DETERMINING CABLE LENGTHS TO ASSURE A SAFE LIFT.

STOWAGE AND BRACING:

A. STOWAGE OF THIS ITEM IS RESTRICTED TO FOUR (4) LAYERS HIGH. UNLESS OPERATIONALLY NECESSARY, IT IS RECOMMENDED NOT TO STOW ROCKET POD/CONTAINERS MORE THAN THREE (3) LAYERS HIGH. ALSO, OTHER CARGO ITEMS MUST NOT BE STACKED OR STOWED ON TOP OF THE DEPICTED ROCKET POD/CONTAINERS.

B. WHEN STOWING THE ROCKET POD/CONTAINERS WITHIN THE HOLD, OR TWEEN DECK, BRACING SHALL ONLY BE APPLIED AGAINST THE SKIDS AND/OR STRONG POINTS. SEE NOTE "F" BELOW.

C. ADJACENT ROCKET POD/CONTAINERS MUST BE SEPARATED BY BRACING MEMBERS AND/OR ANTI-CHAFING MATERIAL TO AVOID DAMAGE TO ITEMS BY DIRECT CONTACT WITH EACH OTHER. TO PREVENT DISPLACEMENT OF THE ANTI-CHAFING MATERIAL, 14 GAGE BLACK ANNEALED WIRE OR OTHER SUITABLE MATERIAL WILL BE PASSED AROUND THE FRAMEWORK OF THE RP/C AND AROUND THE ANTI-CHAFING PIECES.

D. SUPPORT BLOCKS AS SHOWN ON PAGE 7 MUST BE USED UNDER ALL LAYERS OF CONTAINERS EXCEPT FOR THE TOP LAYER, SO AS TO PREVENT DAMAGE TO THE SHOCK ISOLATORS. TWO SUPPORT BLOCKS WILL BE REQUIRED UNDER EACH ROCKET POD/CONTAINER.

E. SPECIES, GRADE AND SIZE OF LUMBER TO BE USED WILL COMPLY WITH REQUIREMENTS OF CURRENT SHIPWRIGHT-CARPENTRY AND RELATED SERVICES CONTRACTS. BRACING METHODS AND LUMBER SIZES DEPICTED IN THIS DRAWING ARE CONSIDERED MINIMUM AND ARE NOT INTENDED TO CONFLICT WITH CONTRACT REQUIREMENTS.

F. CAUTION: CARE MUST BE EXERCISED TO INSURE THAT PRESSURE IS NOT APPLIED AGAINST THE TUBES (ENDS AND SIDES) OF THE CONTAINERS OR THE UPPER RAIL NEAR THE CROSSMEMBER MARKED "NO STEP" DURING HANDLING OPERATIONS OR WHEN BRACED. ALSO, PERSONNEL SHALL NOT STAND OR WALK ON THE FIBERGLASS TUBES OR THE CROSSMEMBERS SO MARKED.

G. IT IS RECOMMENDED THAT THE ROCKET POD/CONTAINERS BE STOWED LENGTHWISE IN THE SHIP AS SHOWN, HOWEVER, CROSSWISE STOWAGE IS ACCEPTABLE. STACKED CONTAINERS SHALL BE STOWED WITH THE FORWARD END OF AN UPPER CONTAINER DIRECTLY ABOVE THE FORWARD END OF A LOWER CONTAINER.

REVISIONS

REVISION NO. 1, DATED NOV 1988 CONSISTS OF:

1. ALLOWING FOUR (4) HIGH STACKING OF CONTAINERS.

2. REMOVING PROCEDURES FOR STOWAGE ON WEATHER DECK.

REVISION NO. 2, DATED SEP 1990 CONSISTS OF:

1. REDESIGNING BLOCKING TO BE USED WITHIN THE SHIP HOLD.

2. REMOVING THE TOMMING PROCEDURES.

3. CHANGING NOMENCLATURE OF ITEM FROM LAUNCH POD/CONTAINER TO ROCKET POD/CONTAINER.

4. REMOVING UNITIZATION PROCEDURES

5. ADDING SUPPORT BLOCKS FOR USE WITH ALL LAYERS.

REVISION NO. 3, DATED MARCH 1993, CONSISTS OF:

ADDING PROCEDURES TO INCLUDE BARGE LOADING

CAUTION: ROCKET POD/CONTAINERS MUST BE SLING HANDLED INDIVIDUALLY. SLINGING OF MORE THAN ONE RP/C IN ONE LIFT WILL NOT BE ACCOMPLISHED. SEE "HANDLING NOTE B" ON PAGE 2.

PRECAUTIONARY PROVISIONS FOR HANDLING, STOWAGE AND BRACING AS SPECIFIED IN THE NOTES ON PAGE 2 MUST BE OBSERVED.

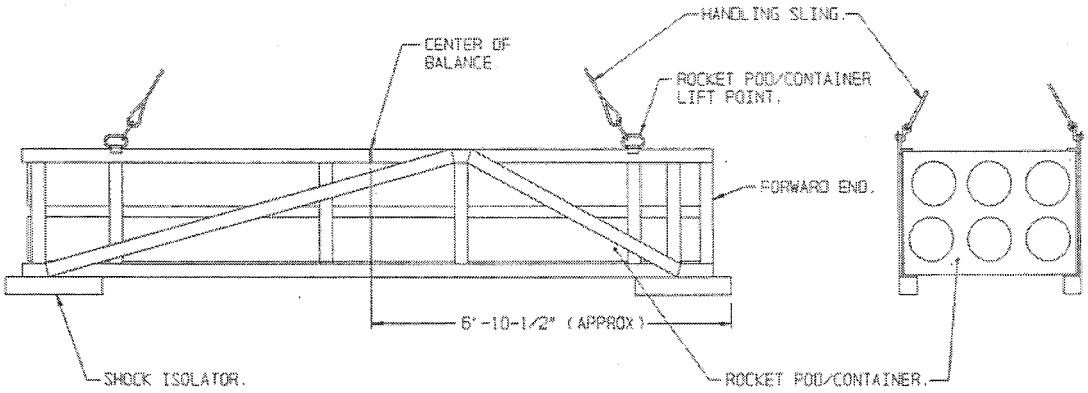

ELEVATION VIEW

END VIEW

ATTACHMENT OF HANDLING SLING TO ROCKET POD/CONTAINER

PROJECT GM 724-79

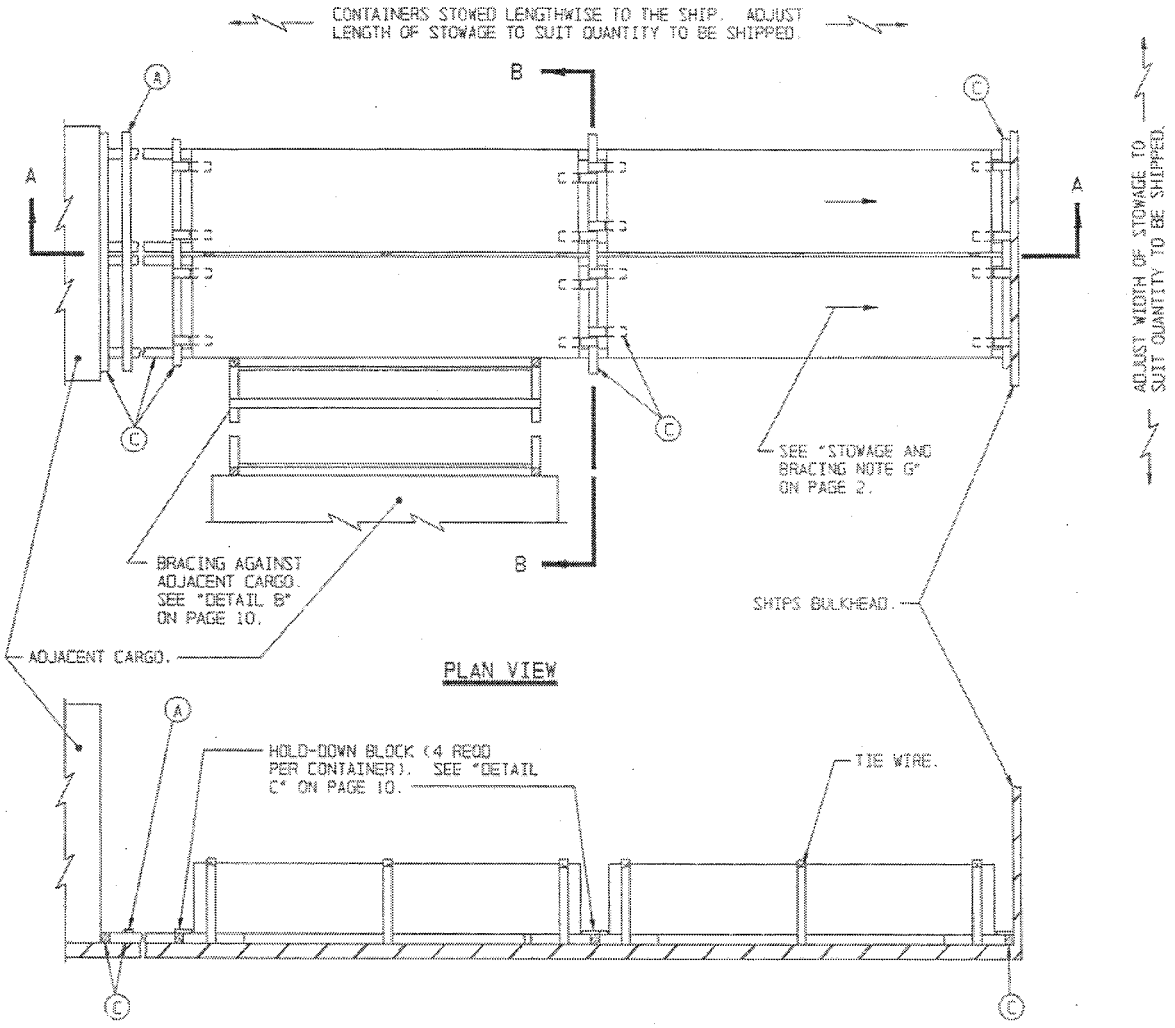

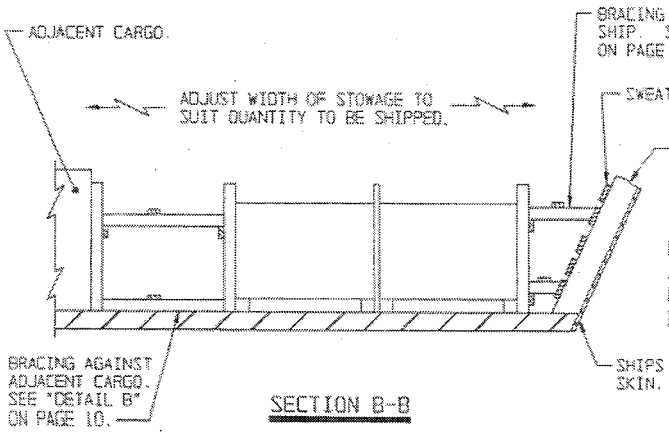

MINIMUM LUMBER SIZES	
A	2" X 4"
C	4" X 4"

PRECAUTIONARY PROVISIONS FOR HANDLING, STOWAGE AND BRACING AS SPECIFIED IN THE NOTES ON PAGE 2 MUST BE OBSERVED. ONLY LATERAL AND LONGITUDINAL BRACING ARE DEPICTED ON THIS PAGE.

BRACING OF ONE LAYER OF ROCKET POD/CONTAINERS ABOARD SHIPS

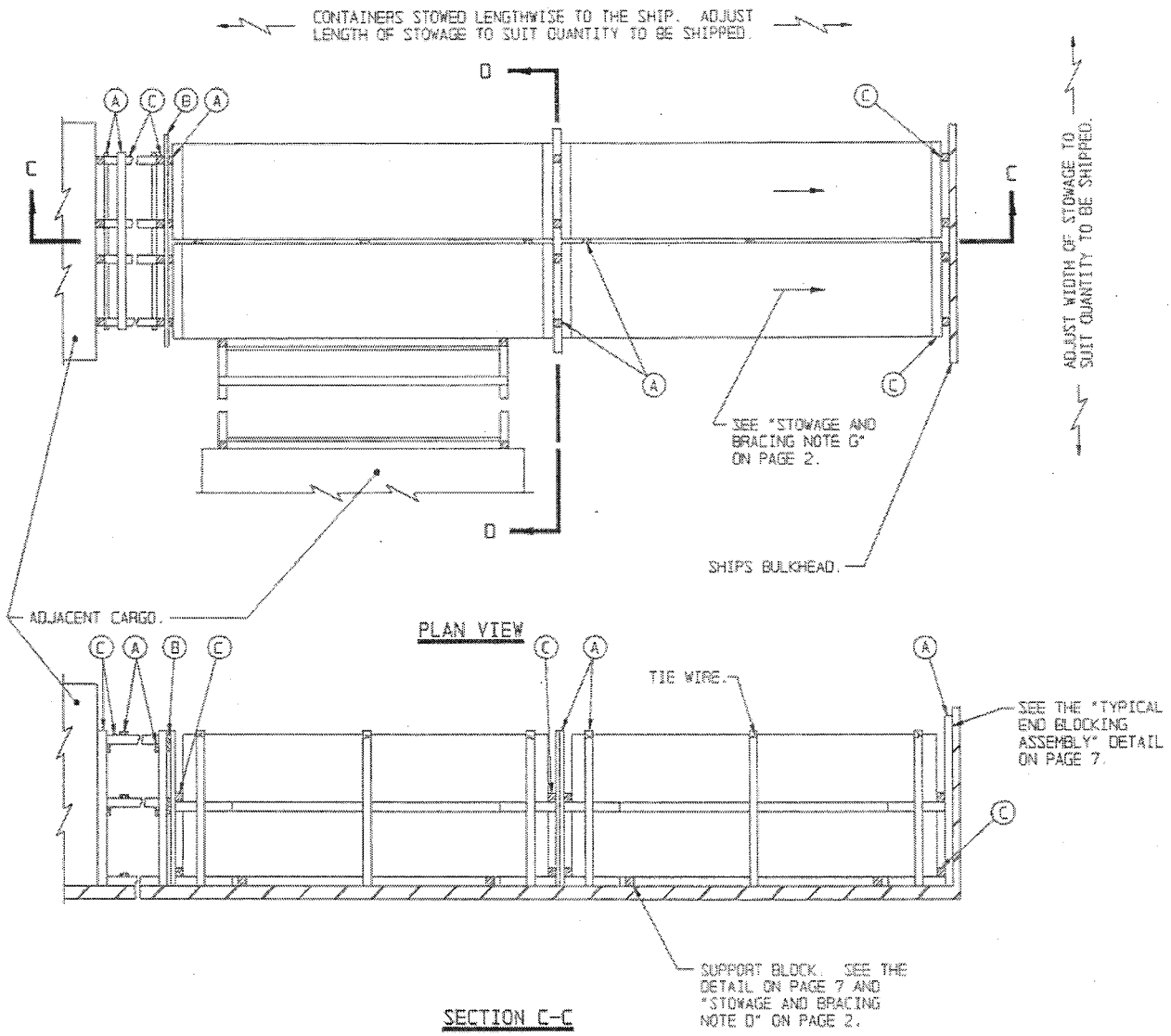

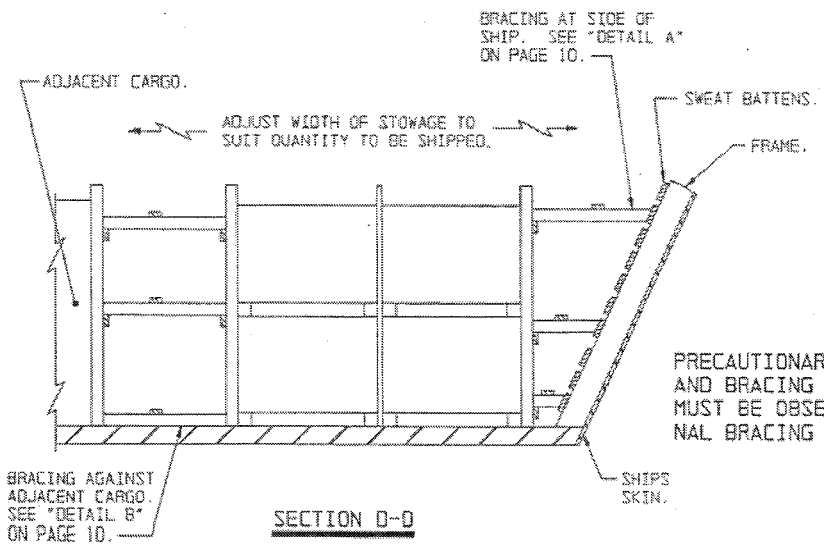

MINIMUM LUMBER SIZES	
A	2" X 4"
B	2" X 6"
C	4" X 4"

PRECAUTIONARY PROVISIONS FOR HANDLING, STOWAGE AND BRACING AS SPECIFIED IN THE NOTES ON PAGE 2 MUST BE OBSERVED. ONLY LATERAL AND LONGITUDINAL BRACING ARE DEPICTED ON THIS PAGE.

BRACING OF TWO LAYERS OF ROCKET POD/CONTAINERS ABOARD SHIPS

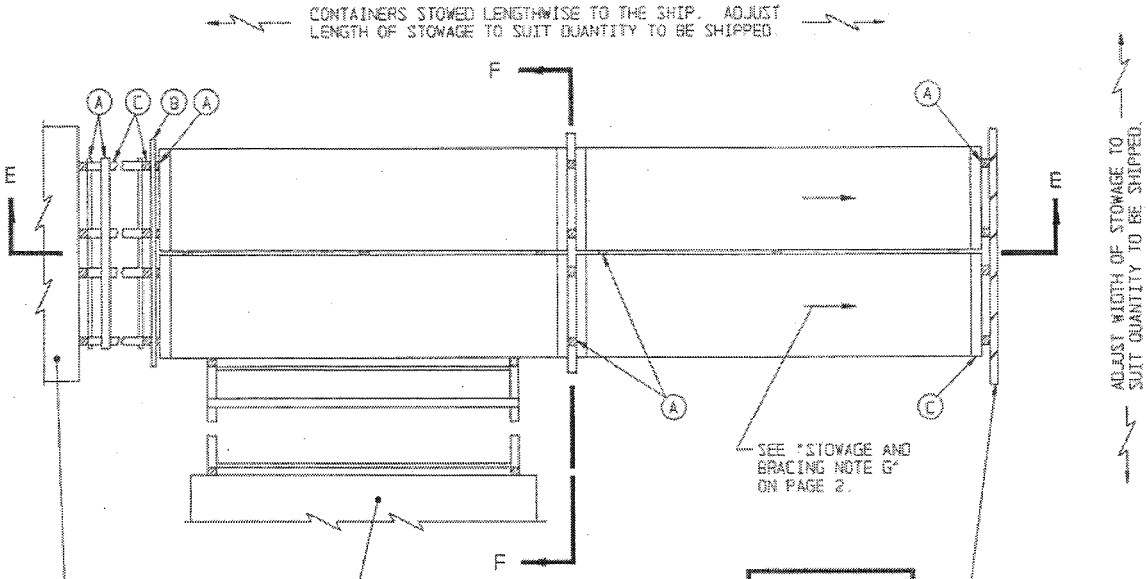

PLAN VIEW

MINIMUM LUMBER SIZES	
(A)	2" X 4"
(B)	2" X 6"
(C)	4" X 4"

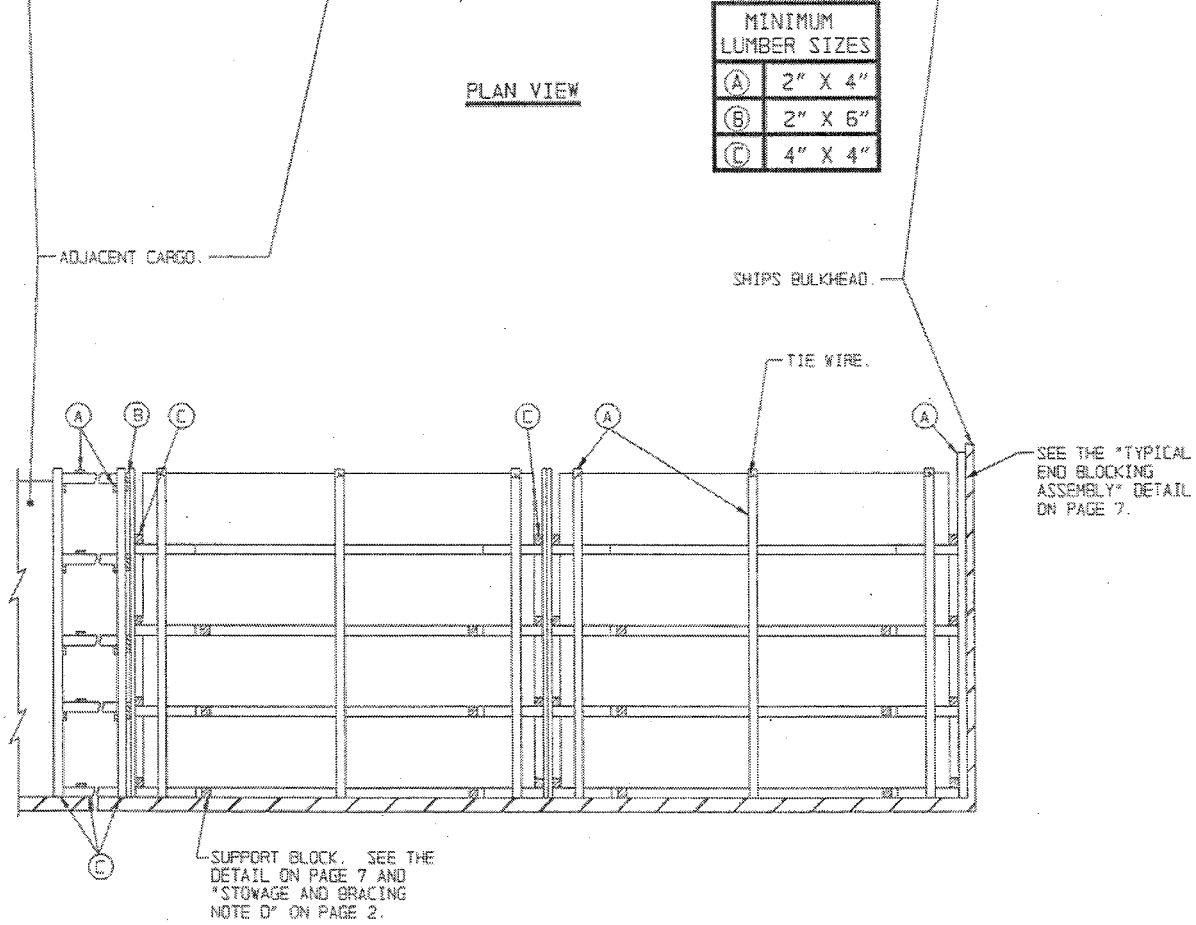

SECTION E-E

PRECAUTIONARY PROVISIONS FOR HANDLING, STOWAGE AND BRACING AS SPECIFIED IN THE NOTES ON PAGE 2 MUST BE OBSERVED. ONLY LATERAL AND LONGITUDINAL BRACING ARE DEPICTED ON THIS PAGE.

BRACING OF FOUR LAYERS OF ROCKET POD/CONTAINERS ABOARD SHIPS

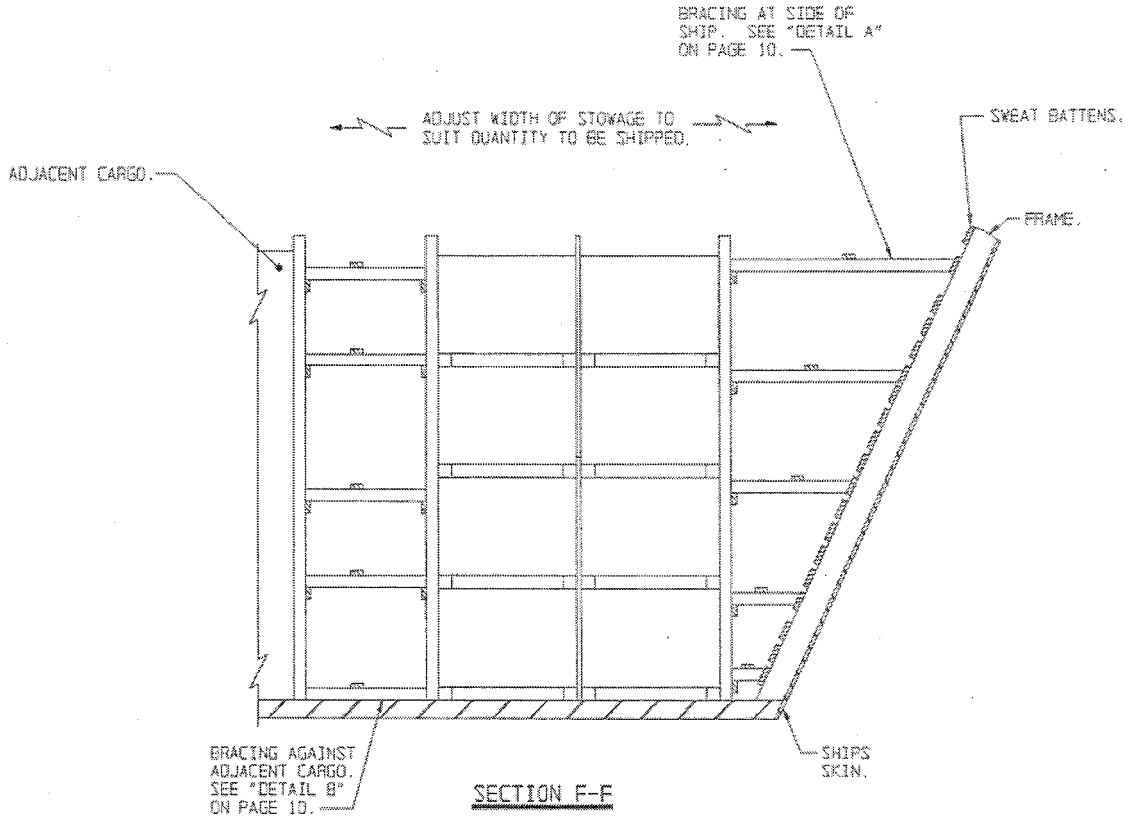

SECTION F-F

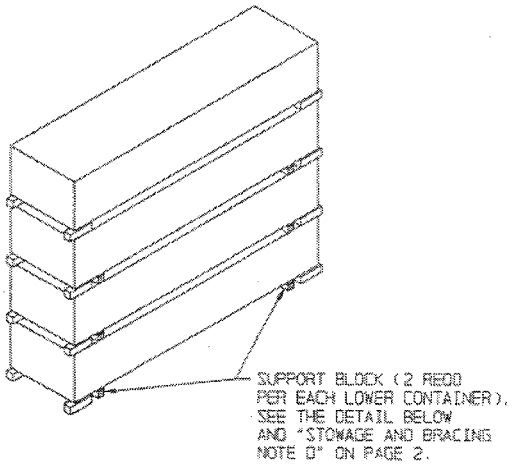

CONTAINER STACKING DETAIL

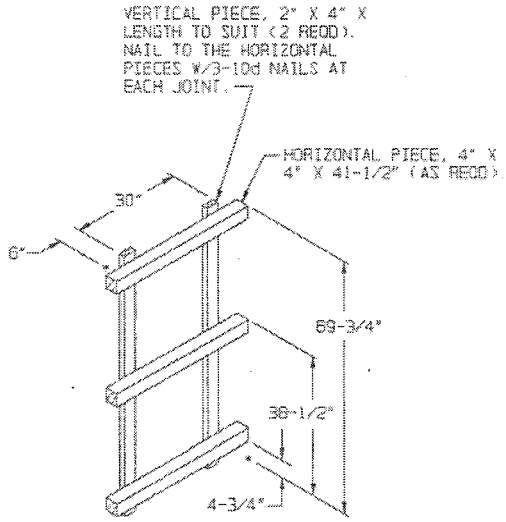

TYPICAL END BLOCKING ASEMBLY

THE ASSEMBLY DEPICTED ABOVE IS DESIGNED FOR A 3-LAYER LOAD. FOR A 2-LAYER LOAD, OMIT THE HORIZONTAL PIECE AT THE 69-3/4" LEVEL AND FOR A 4-LAYER LOAD, AN ADDITIONAL HORIZONTAL PIECE WILL BE ADDED AT 8'-9". THE LENGTH OF THE VERTICAL PIECES WILL BE ADJUSTED AS APPROPRIATE. THIS ASSEMBLY IS FOR USE ABOARD SHIPS AND/OR IN BARGES. SEE THE "ALTERNATIVE END BLOCKING ASSEMBLY" DETAIL ON PAGE 12.

SUPPORT BLOCK

ALT: USE 2 THICKNESSES OF 2" X 4" X 41" AND 1-1" X 4" X 41" IN LIEU OF THE DEPICTED MATERIAL. LAMINATE APPROPRIATELY.

BRACING OF FOUR LAYERS OF ROCKET POD/CONTAINERS ABOARD SHIPS

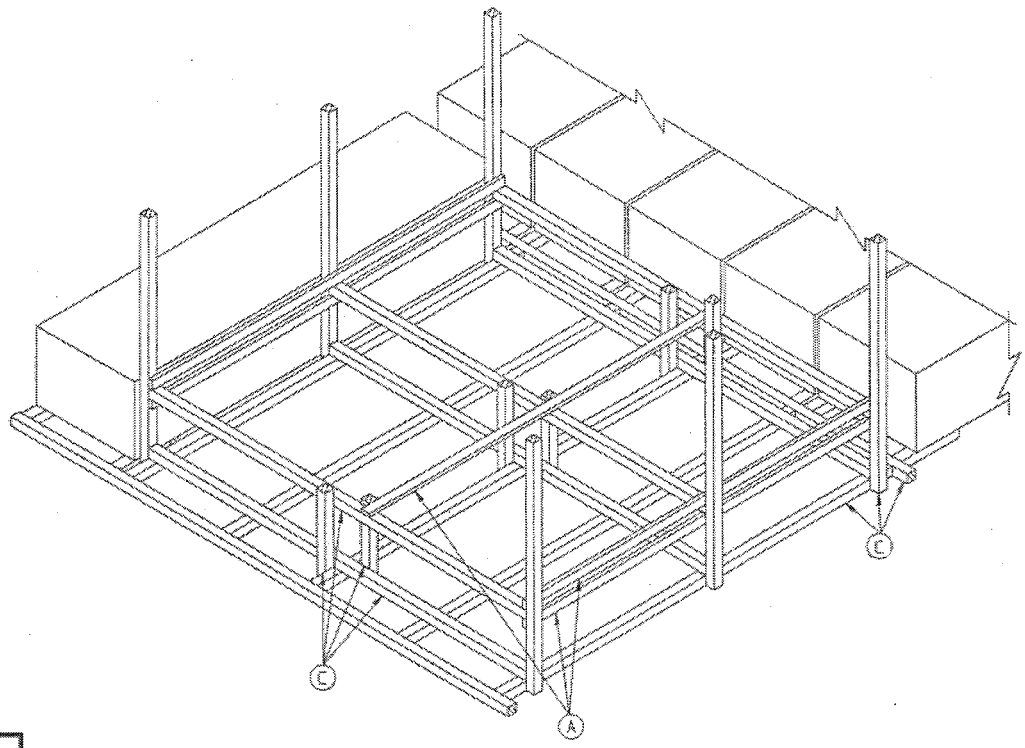

MINIMUM LUMBER SIZES	
Ⓐ	2" X 4"
Ⓒ	4" X 4"

ISOMETRIC VIEW

THE BRACING METHOD DEPICTED ABOVE IS ONLY SHOWN FOR GUIDANCE PURPOSES. AS A MINIMUM, IT OR A COMPARABLE METHOD IS TO BE USED TO BRACE ACROSS A LARGE VOID AREA WHEN SUFFICIENT ROCKET POD/CONTAINERS, OR OTHER CARGO ITEMS, ARE NOT AVAILABLE TO FILL THE VOID. SEE "STOWAGE AND BRACING NOTE F" ON PAGE 2.

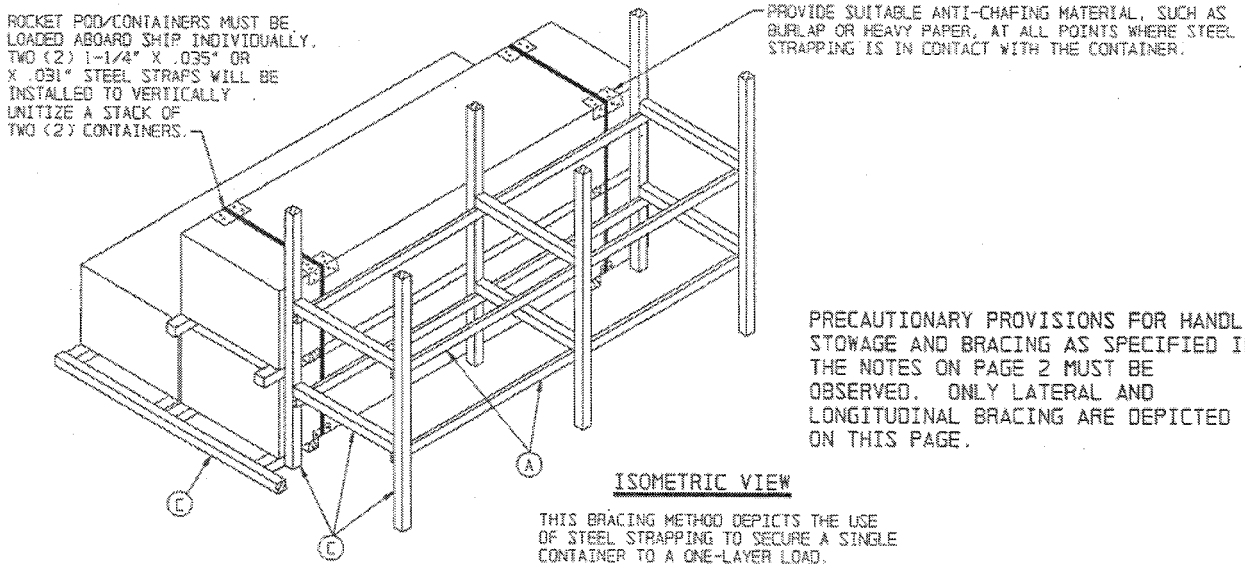

PRECAUTIONARY PROVISIONS FOR HANDLING, STOWAGE AND BRACING AS SPECIFIED IN THE NOTES ON PAGE 2 MUST BE OBSERVED. ONLY LATERAL AND LONGITUDINAL BRACING ARE DEPICTED ON THIS PAGE.

ISOMETRIC VIEW

THIS BRACING METHOD DEPICTS THE USE OF STEEL STRAPPING TO SECURE A SINGLE CONTAINER TO A ONE-LAYER LOAD.

ALTERNATIVE METHODS OF BRACING ROCKET POD/CONTAINERS ABOARD SHIPS OR BARGES

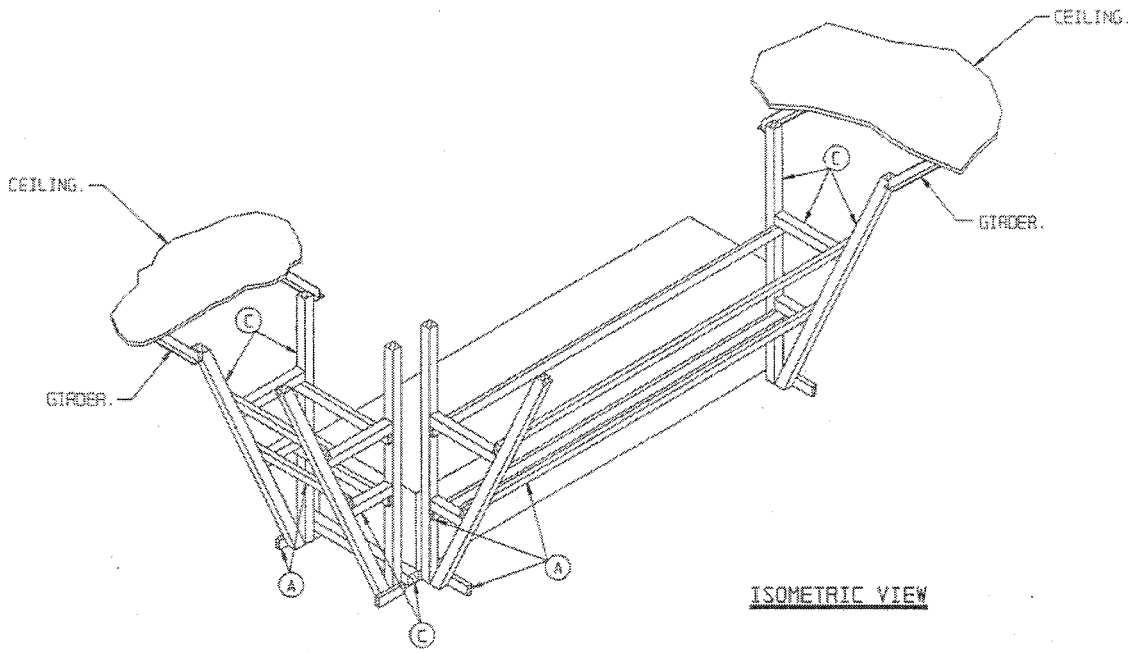

ISOMETRIC VIEW

PRECAUTIONARY PROVISIONS FOR HANDLING, STOWAGE AND BRACING AS SPECIFIED IN THE NOTES ON PAGE 2 MUST BE OBSERVED. ONLY LATERAL AND LONGITUDINAL BRACING ARE DEPICTED ON THIS PAGE.

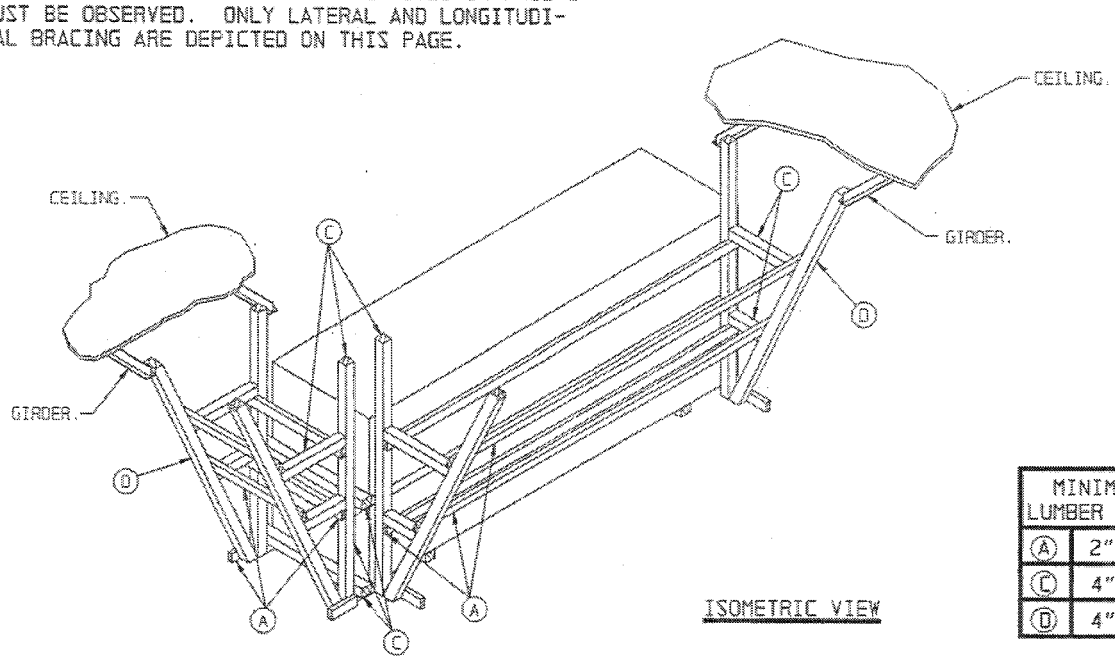

ISOMETRIC VIEW

MINIMUM LUMBER SIZES	
A	2" X 4"
C	4" X 4"
D	4" X 6"

ALTERNATIVE METHODS OF BRACING ROCKET POD/CONTAINERS ABOARD SHIPS

PROJECT GM 724-79

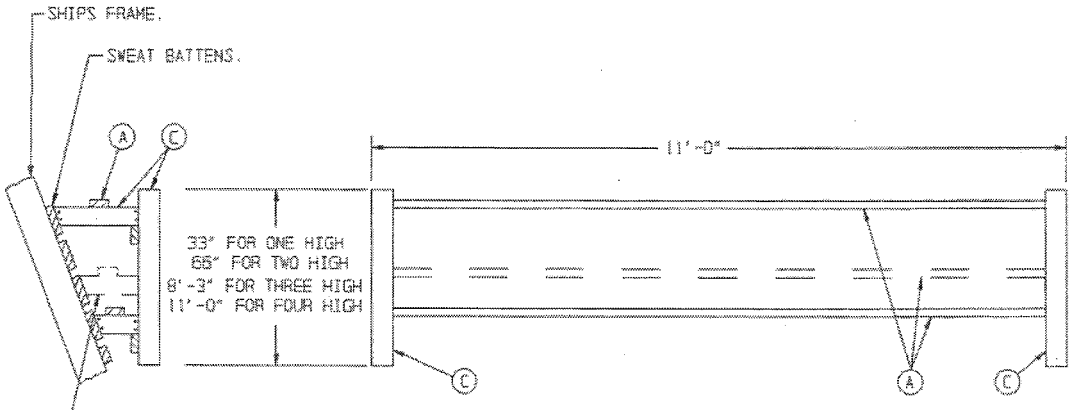

DETAIL A

SUGGESTED METHOD OF BRACING AT SIDE OF SHIP.

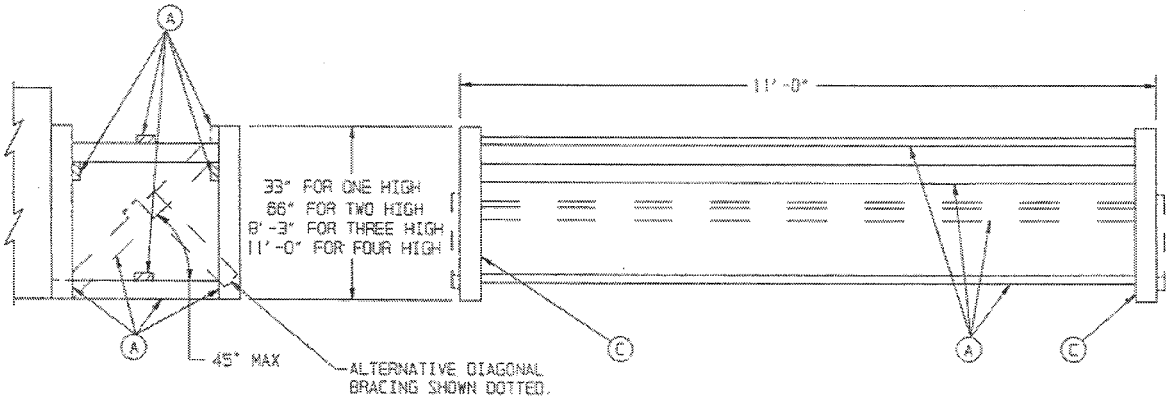

DETAIL B

SUGGESTED METHOD OF BRACING AGAINST ADJACENT CARGO OR SIDE OF BARGE.

NOTE ◑:

THE HOLD-DOWN BLOCK AS SHOWN AT THE RIGHT AND IN THE LOAD VIEWS ON PAGES 4 AND 11 MAY BE USED AS ONE METHOD TO PREVENT THE FLOORLINE BLOCKING AT THE ENDS OF OR BETWEEN LONGITUDINALLY ADJACENT ONE-LAYER HIGH CONTAINERS FROM BECOMING DISPLACED. IF DESIRED, THE FLOORLINE BLOCKING MAY BE HELD IN PLACE BY OTHER ACCEPTABLE MEANS, SUCH AS VERTICAL BRACING, ETC.

PRECAUTIONARY PROVISIONS FOR HANDLING, STOWAGE AND BRACING AS SPECIFIED IN THE NOTES ON PAGE 2 MUST BE OBSERVED.

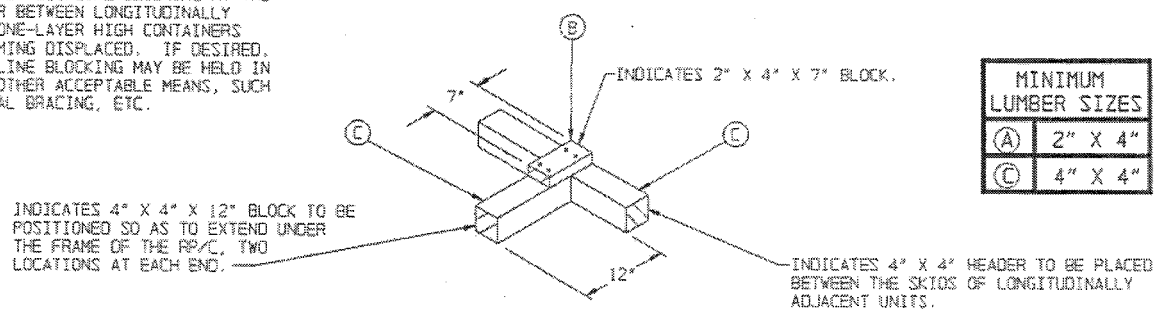

MINIMUM LUMBER SIZES	
Ⓐ	2" X 4"
Ⓒ	4" X 4"

DETAIL C

(HOLD-DOWN BLOCK)
SEE "NOTE ◑" AT LEFT.

DETAILS

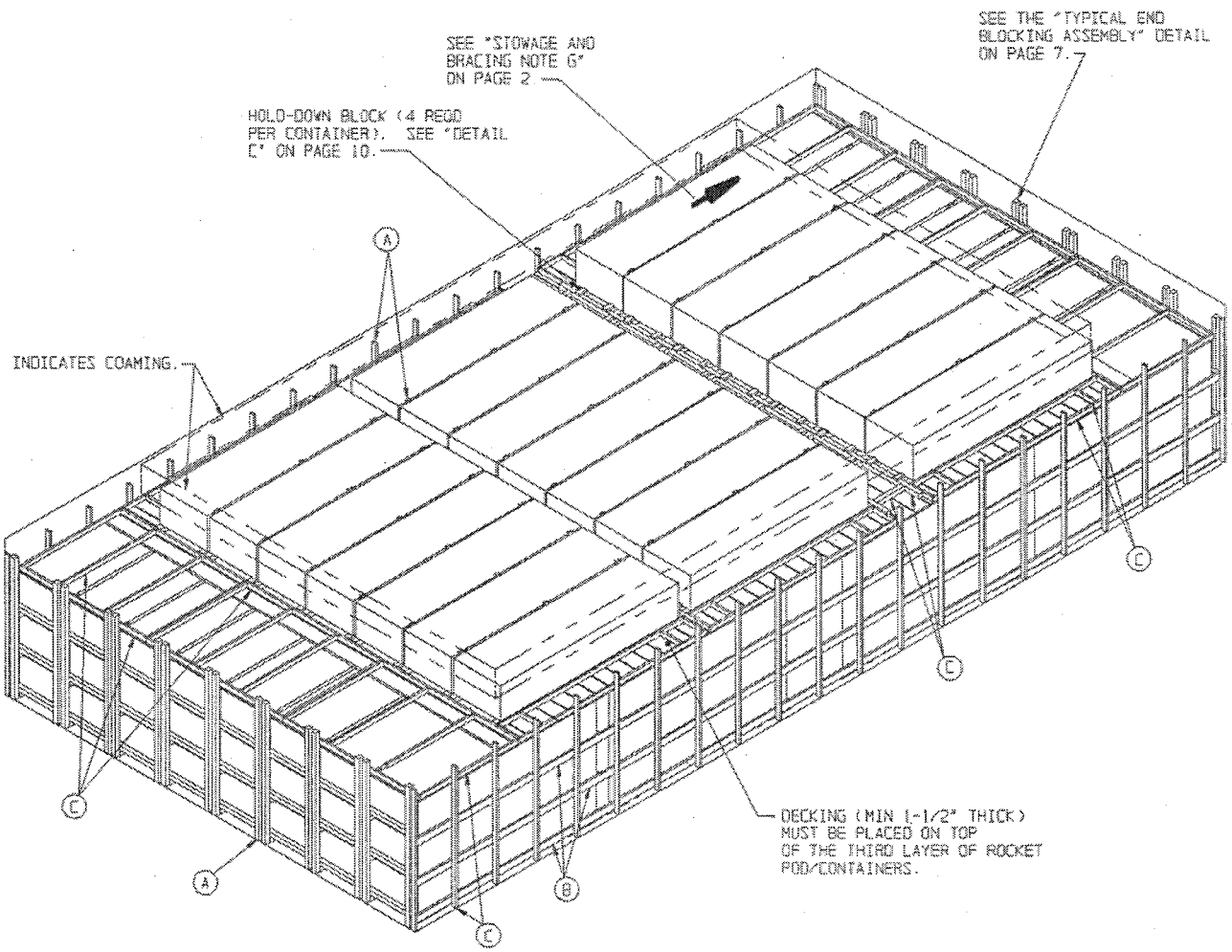

ISOMETRIC VIEW

THE VIEW SHOWN ABOVE DEPICTS A TYPICAL LOAD OF 117 ROCKET POD/CONTAINERS IN A BARGE HAVING INSIDE DIMENSIONS OF 59'-11" LONG BY 30'-1" WIDE. BLOCKING BETWEEN STACKS OF POD/CONTAINERS WILL BE THE SAME AS SHOWN ON PAGES 4 AND 6.

MINIMUM LUMBER SIZES	
A	2" X 4"
B	2" X 6"
C	4" X 4"

PRECAUTIONARY PROVISIONS FOR HANDLING, STOWAGE AND BRACING AS SPECIFIED IN THE NOTES ON PAGE 2 MUST BE OBSERVED. ONLY LATERAL AND LONGITUDINAL BRACING ARE DEPICTED ON THIS PAGE.

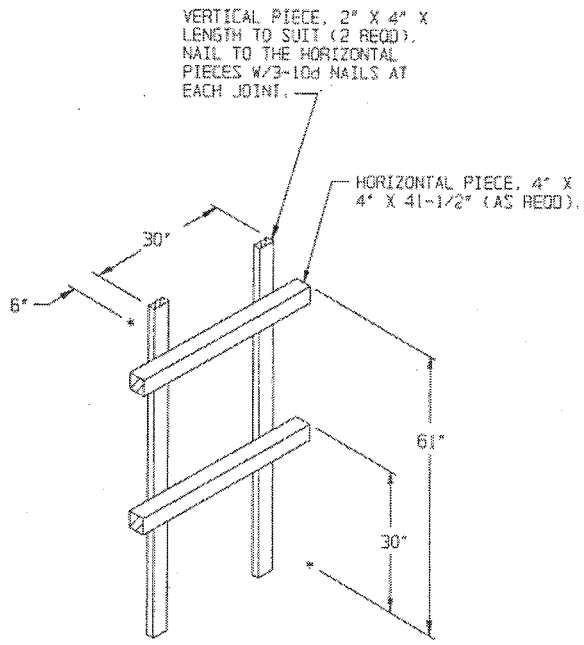

ALTERNATIVE END BLOCKING ASSEMBLY

THE ASSEMBLY DEPICTED ABOVE IS DESIGNED FOR A 3-LAYER LOAD. FOR A 2-LAYER LOAD, OMIT THE HORIZONTAL PIECE AT THE 61" LEVEL AND FOR A 4-LAYER LOAD, AN ADDITIONAL HORIZONTAL PIECE WILL BE ADDED AT 7'-8". THE LENGTH OF THE VERTICAL PIECES WILL BE ADJUSTED AS APPROPRIATE. THIS ASSEMBLY IS FOR USE ABOARD SHIPS AND/OR IN BARGES.